ENVIROTECH
FACADE
SOLUTIONS

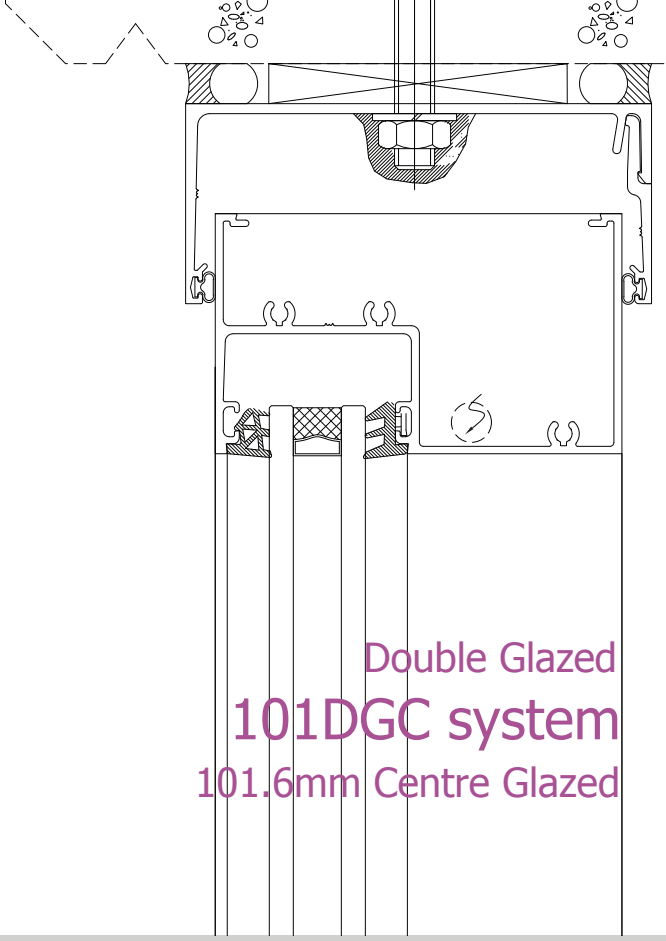

Double Glazed

101DGC system

101.6mm Centre Glazed



Designers and Suppliers
of Architectural
Aluminium Systems

www.envirotechfs.com.au

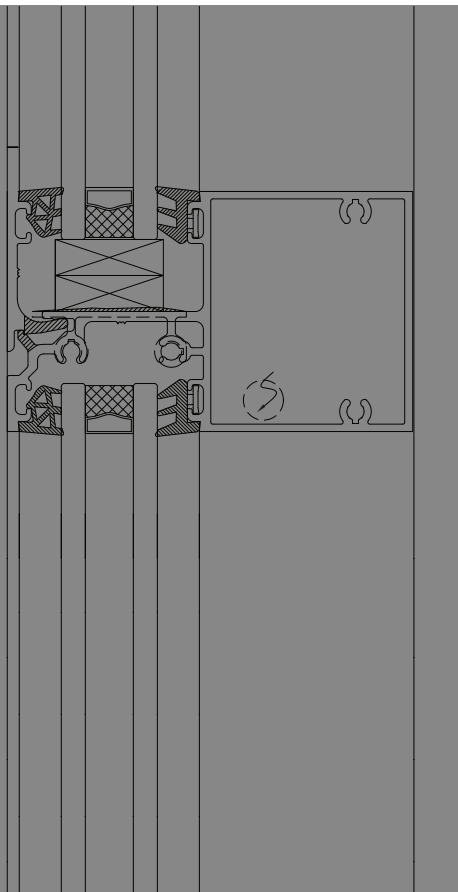

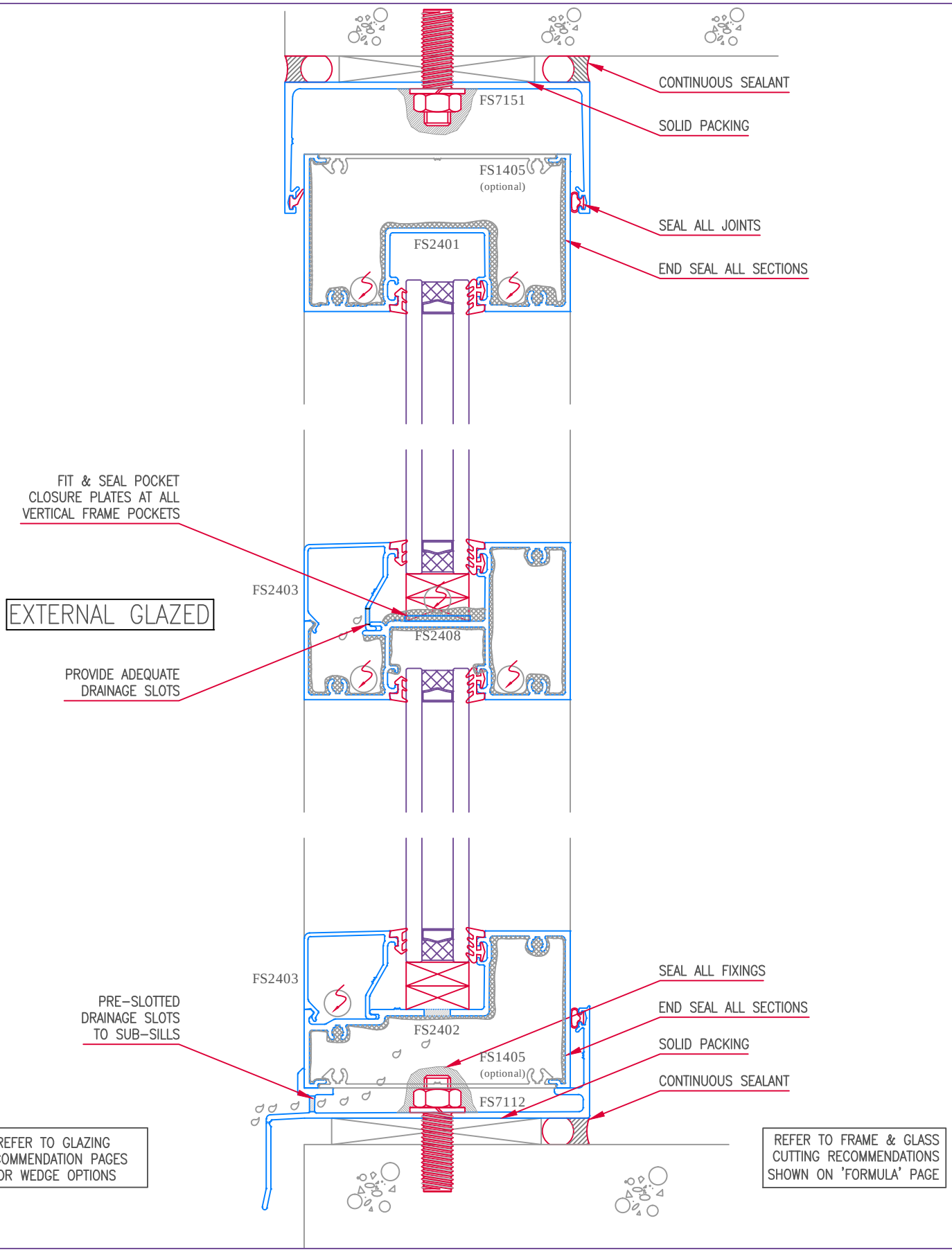

Copyright

© ENVIROTECH FACADE SOLUTIONS 2009 ABN 16 138 073 631 claims copyright ownership of all information, text and designs contained in this publication. No part of this publication may be reproduced in any material form without prior written permission of ENVIROTECH FACADE SOLUTIONS PTY LTD.
Apart from any use permitted under the copyright act 1968 all other rights are reserved.

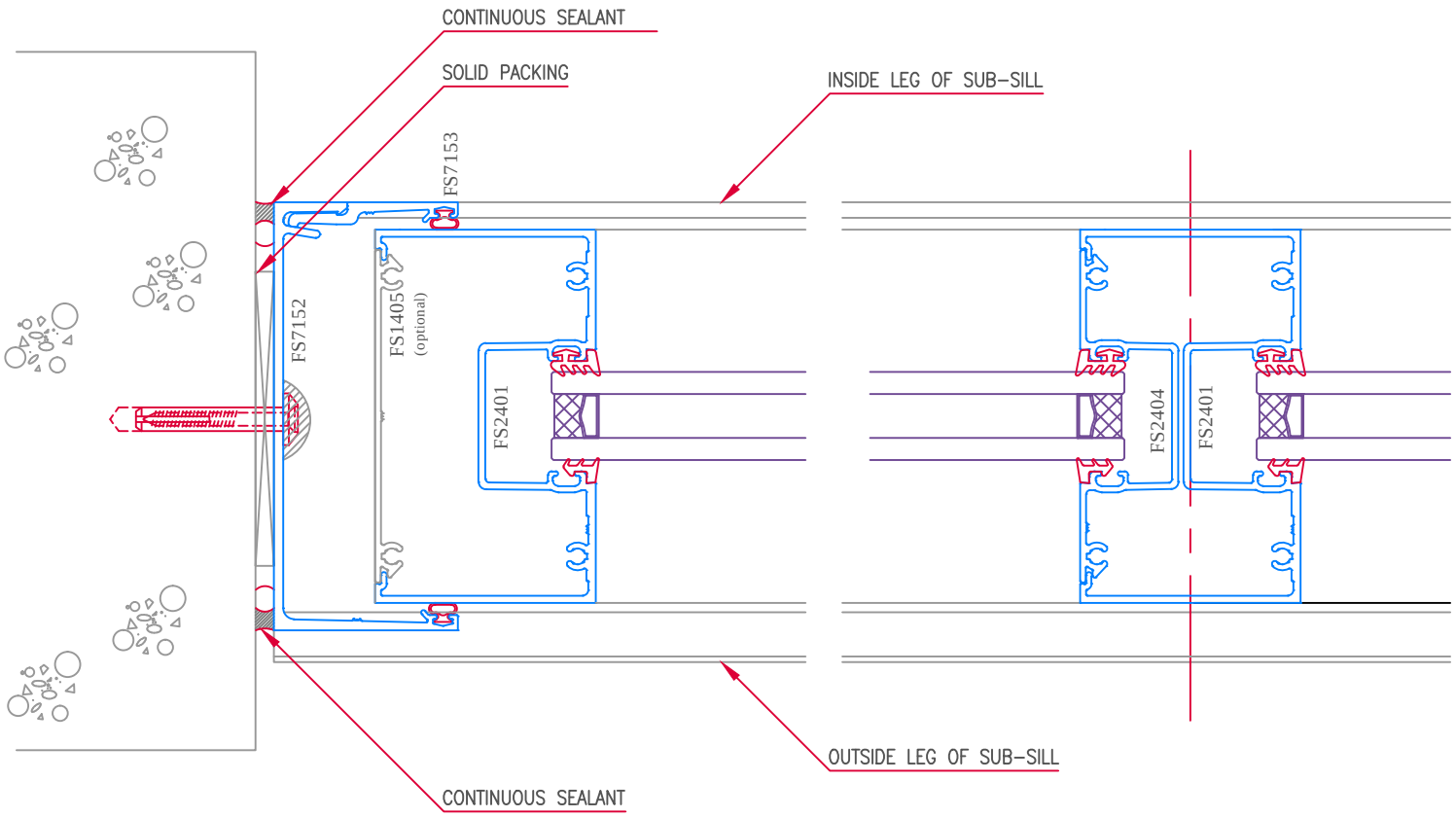

EXTERNAL GLAZED

REFER TO GLAZING RECOMMENDATION PAGES FOR WEDGE OPTIONS

REFER TO FRAME & GLASS CUTTING RECOMMENDATIONS SHOWN ON 'FORMULA' PAGE

Copyright

© ENVIROTECH FACADE SOLUTIONS 2009 ABN 16 138 073 631 claims copyright ownership of all information, text and designs contained in this publication. No part of this publication may be reproduced in any material form without prior written permission of ENVIROTECH FACADE SOLUTIONS PTY LTD.
Apart from any use permitted under the copyright act 1968 all other rights are reserved.

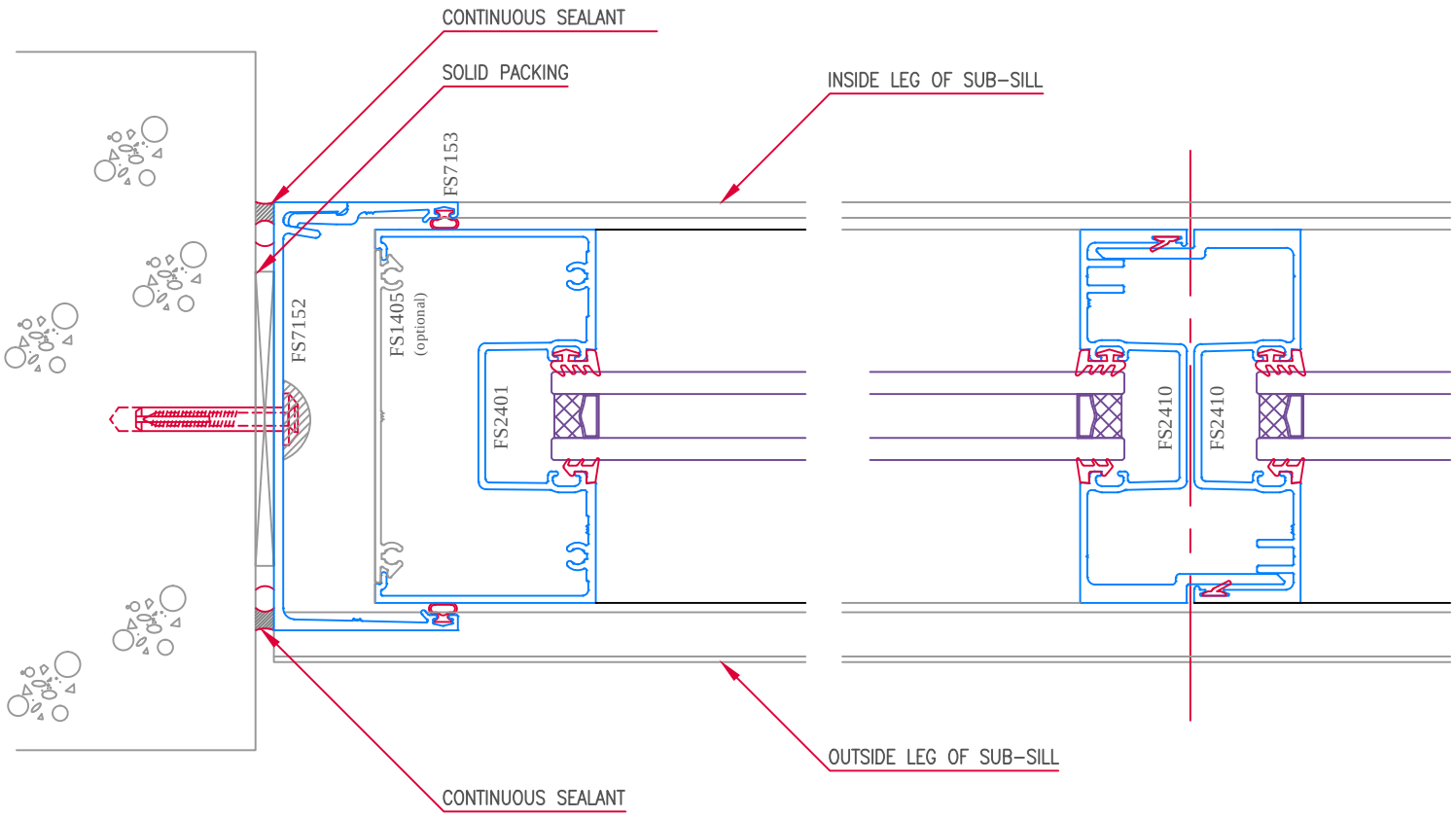

EXTERNAL GLAZED

REFER TO GLAZING RECOMMENDATION PAGES FOR WEDGE OPTIONS

REFER TO FRAME & GLASS CUTTING RECOMMENDATIONS SHOWN ON 'FORMULA' PAGE

Copyright

© ENVIROTECH FACADE SOLUTIONS 2009 ABN 16 138 073 631 claims copyright ownership of all information, text and designs contained in this publication. No part of this publication may be reproduced in any material form without prior written permission of ENVIROTECH FACADE SOLUTIONS PTY LTD.
Apart from any use permitted under the copyright act 1968 all other rights are reserved.

101DGC System

101.6mm x 60mm Centre Glazed

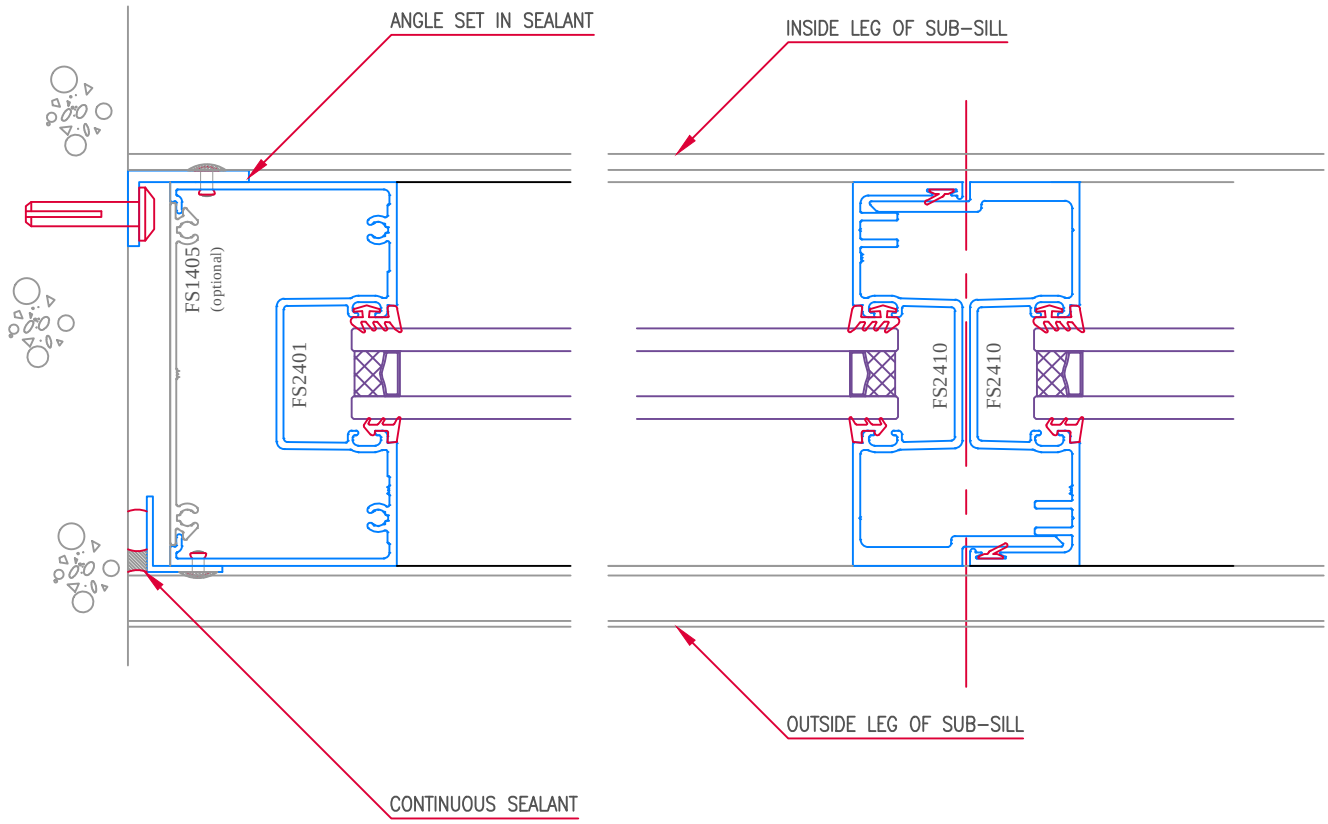

EXTERNAL GLAZED

REFER TO GLAZING RECOMMENDATION PAGES FOR WEDGE OPTIONS

REFER TO FRAME & GLASS CUTTING RECOMMENDATIONS SHOWN ON 'FORMULA' PAGE

Copyright
© ENVIROTECH FACADE SOLUTIONS 2009 ABN 16 138 073 631 claims copyright ownership of all information, text and designs contained in this publication. No part of this publication may be reproduced in any material form without prior written permission of ENVIROTECH FACADE SOLUTIONS PTY LTD.
Apart from any use permitted under the copyright act 1968 all other rights are reserved.

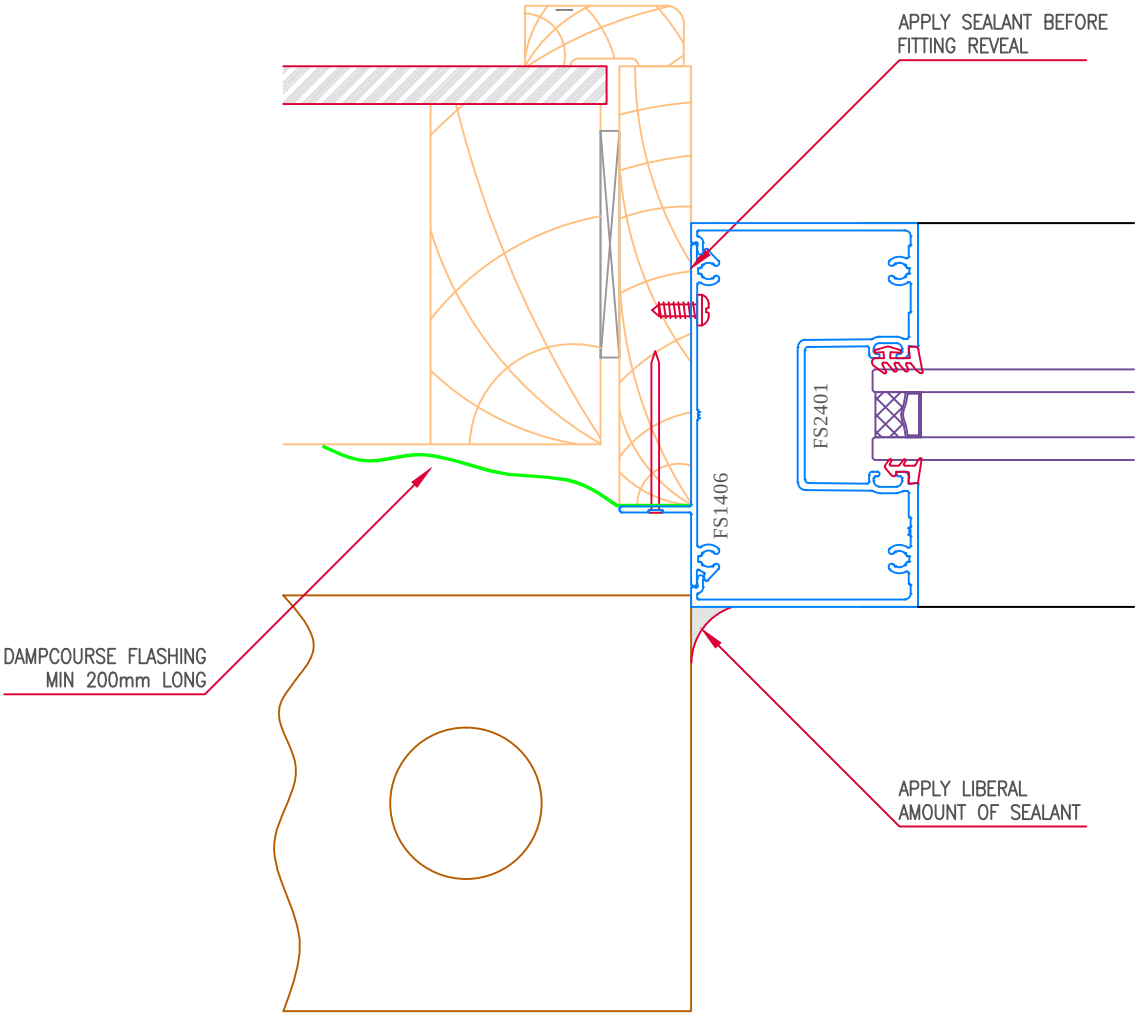

REFER TO GLAZING RECOMMENDATION PAGES FOR WEDGE OPTIONS

REFER TO FRAME & GLASS CUTTING RECOMMENDATIONS SHOWN ON 'FORMULA' PAGE

Copyright

© ENVIROTECH FACADE SOLUTIONS 2009 ABN 16 138 073 631 claims copyright ownership of all information, text and designs contained in this publication. No part of this publication may be reproduced in any material form without prior written permission of ENVIROTECH FACADE SOLUTIONS PTY LTD.
Apart from any use permitted under the copyright act 1968 all other rights are reserved.

FS2401
Frame
AP: 662.25

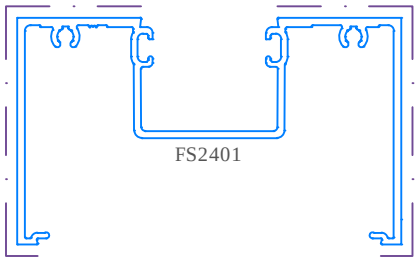

FS2402
SILL
AP: 538.38

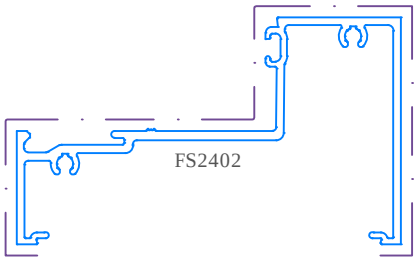

FS2408
Transom
AP: 535.61

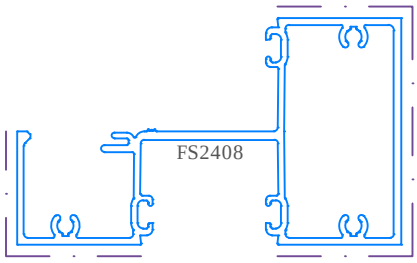

Vis. Face

Copyright
© ENVIROTECH FACADE SOLUTIONS 2009 ABN 16 138 073 631 claims copyright ownership of all information, text and designs contained in this publication. No part of this publication may be reproduced in any material form without prior written permission of ENVIROTECH FACADE SOLUTIONS PTY LTD.
Apart from any use permitted under the copyright act 1968 all other rights are reserved.

FS2410
Self-mating
Mullion
AP: 556.00

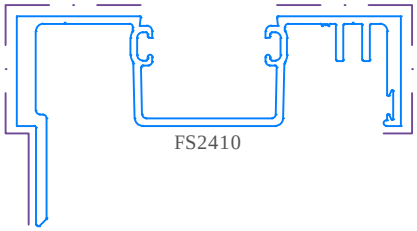

FS2404
Glazing Adaptor
AP:366.75

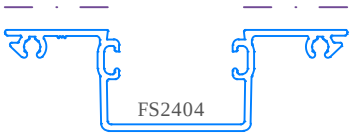

FS2403
External
Glazing Bead
AP: 217.61

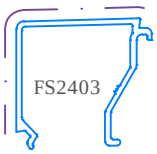

Vis. Face

Copyright
© ENVIROTECH FACADE SOLUTIONS 2009 ABN 16 138 073 631 claims copyright ownership of all information, text and designs contained in this publication. No part of this publication may be reproduced in any material form without prior written permission of ENVIROTECH FACADE SOLUTIONS PTY LTD.
Apart from any use permitted under the copyright act 1968 all other rights are reserved.

Ixx : 210.23 x 10^3 mm^4
Iyy : 921.87 x 10^3 mm^4

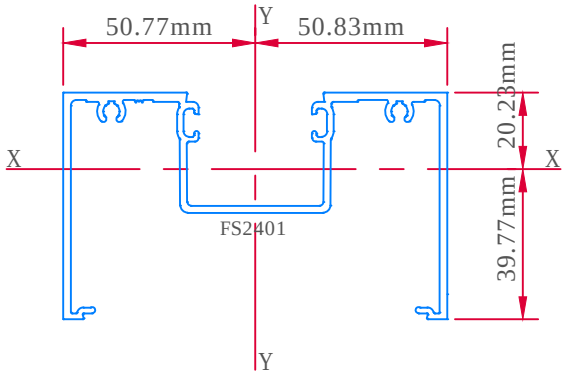

Ixx : 160.32 x 10^3 mm^4
Iyy : 737.53 x 10^3 mm^4

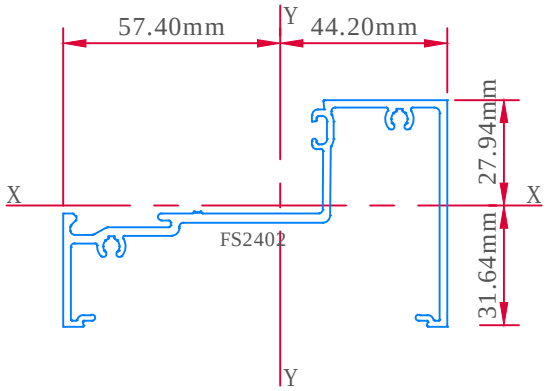

Ixx : 275.97 x 10^3 mm^4
Iyy : 767.31 x 10^3 mm^4

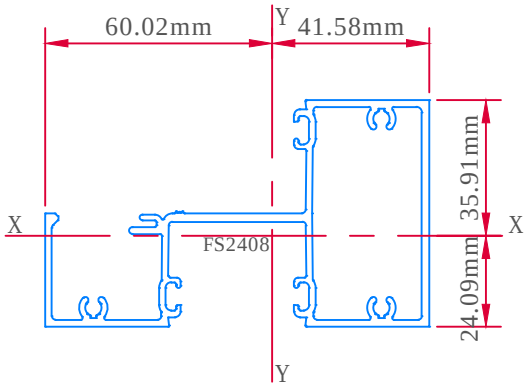

Copyright
© ENVIROTECH FACADE SOLUTIONS 2009 ABN 16 138 073 631 claims copyright ownership of all information, text and designs contained in this publication. No part of this publication may be reproduced in any material form without prior written permission of ENVIROTECH FACADE SOLUTIONS PTY LTD.
Apart from any use permitted under the copyright act 1968 all other rights are reserved.

ENVIROTECH
FACADE
SOLUTIONS

Double Glazed

101DGC System

101.6mm x 60mm Centre Glazed

-MP2-

scale 1:2

4th edition

Ixx : 119.66 x 10^3 mm^4
Iyy : 940.71 x 10^3 mm^4

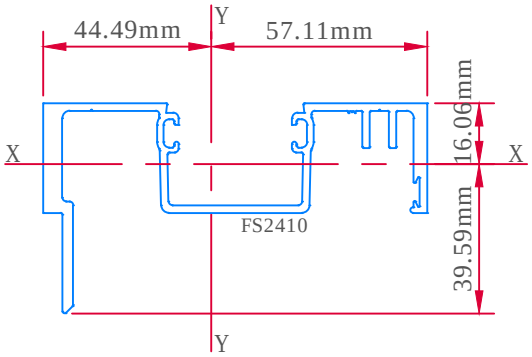

Combined
Ixx : 239.32 x 10^3 mm^4
Iyy : 1881.42 x 10^3 mm^4

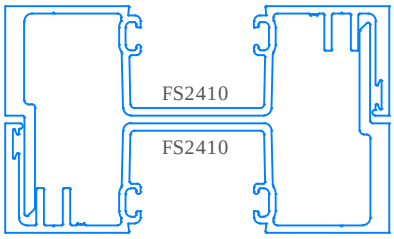

Ixx : 30.77 x 10^3 mm^4
Iyy : 212.39 x 10^3 mm^4

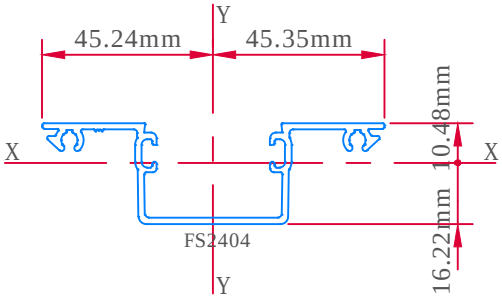

Copyright
© ENVIROTECH FACADE SOLUTIONS 2009 ABN 16 138 073 631 claims copyright ownership of all information, text and designs contained in this publication. No part of this publication may be reproduced in any material form without prior written permission of ENVIROTECH FACADE SOLUTIONS PTY LTD.
Apart from any use permitted under the copyright act 1968 all other rights are reserved.

Combined
Ixx : 239.32 x 10^3 mm^4
Iyy : 1881.42 x 10^3 mm^4

Modulus of Elasticity
E = 68900 N/mm

Deflection Limit = 1/250

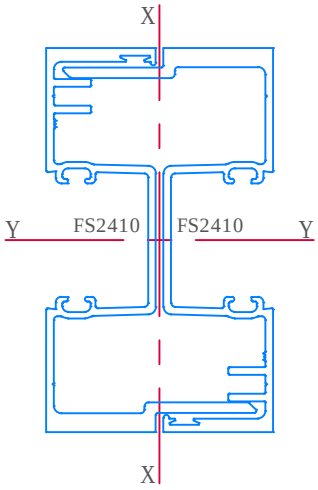

Disclaimer:
1, This mullion span table may be used as a guide only in determining system suitability in general areas.
2, All figures in this table are based on a simply supported criteria.
3, The design wind pressure should always be available from the Building Designer or Structural Engineer for the project.
4, It is the responsibility of the purchaser to satisfy themselves that the selected system and profiles are correct and fit for purpose and comply with all relevant Australian Standards and B.C.A. and Engineering Requirements.

Mullion Height(mm)	Serviceability Limit State Maximum Design Pressure (kPa)								
3800	0.92	-	-	-	-	-	-	-	-
3600	1.09	0.88	-	-	-	-	-	-	-
3400	1.30	1.05	0.89	0.78	-	-	-	-	-
3200	1.56	1.26	1.07	0.94	0.84	0.77	-	-	-
3000	1.90	1.54	1.31	1.15	1.04	0.96	0.90	0.85	0.83
2800	2.34	1.91	1.63	1.44	1.30	1.21	1.14	1.09	1.07
2600	2.94	2.41	2.06	1.83	1.67	1.56	1.48	1.44	1.43
2400	3.77	3.10	2.67	2.38	2.19	2.06	1.99	1.97	2.00
2200	4.94	4.08	3.54	3.19	2.96	2.84	2.79	2.83	2.97
2000	6.65	5.53	4.85	4.42	4.18	4.09	4.15	4.38	4.89
Mullion Spacing(mm)	800	1000	1200	1400	1600	1800	2000	2200	2400

Copyright
© ENVIROTECH FACADE SOLUTIONS 2009 ABN 16 138 073 631 claims copyright ownership of all information, text and designs contained in this publication. No part of this publication may be reproduced in any material form without prior written permission of ENVIROTECH FACADE SOLUTIONS PTY LTD.
Apart from any use permitted under the copyright act 1968 all other rights are reserved.

ENVIROTECH
FACADE
SOLUTIONS

Double Glazed

101DGC System

101.6mm x 60mm Centre Glazed

-W1-

scale 1:2

4th edition

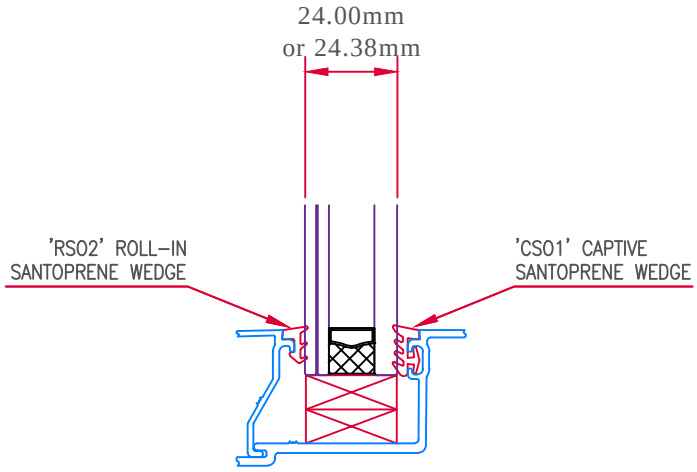

THIS FRAMING SYSTEM ONLY TAKES
IGU UP TO 24mm

SANTOPRENE WEDGES ALSO AVAILABLE
IF REQUIRED

Copyright
© ENVIROTECH FACADE SOLUTIONS 2009 ABN 16 138 073 631
claims copyright ownership of all information, text and designs
contained in this publication. No part of this publication may be
reproduced in any material form without prior written permission
of ENVIROTECH FACADE SOLUTIONS PTY LTD.
Apart from any use permitted under the copyright act 1968
all other rights are reserved.

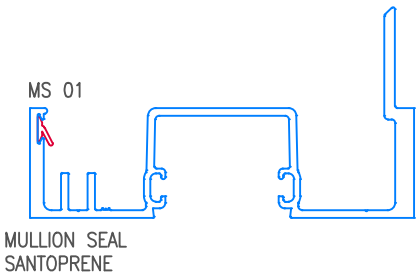

Copyright
© ENVIROTECH FACADE SOLUTIONS 2009 ABN 16 138 073 631 claims copyright ownership of all information, text and designs contained in this publication. No part of this publication may be reproduced in any material form without prior written permission of ENVIROTECH FACADE SOLUTIONS PTY LTD.
Apart from any use permitted under the copyright act 1968 all other rights are reserved.

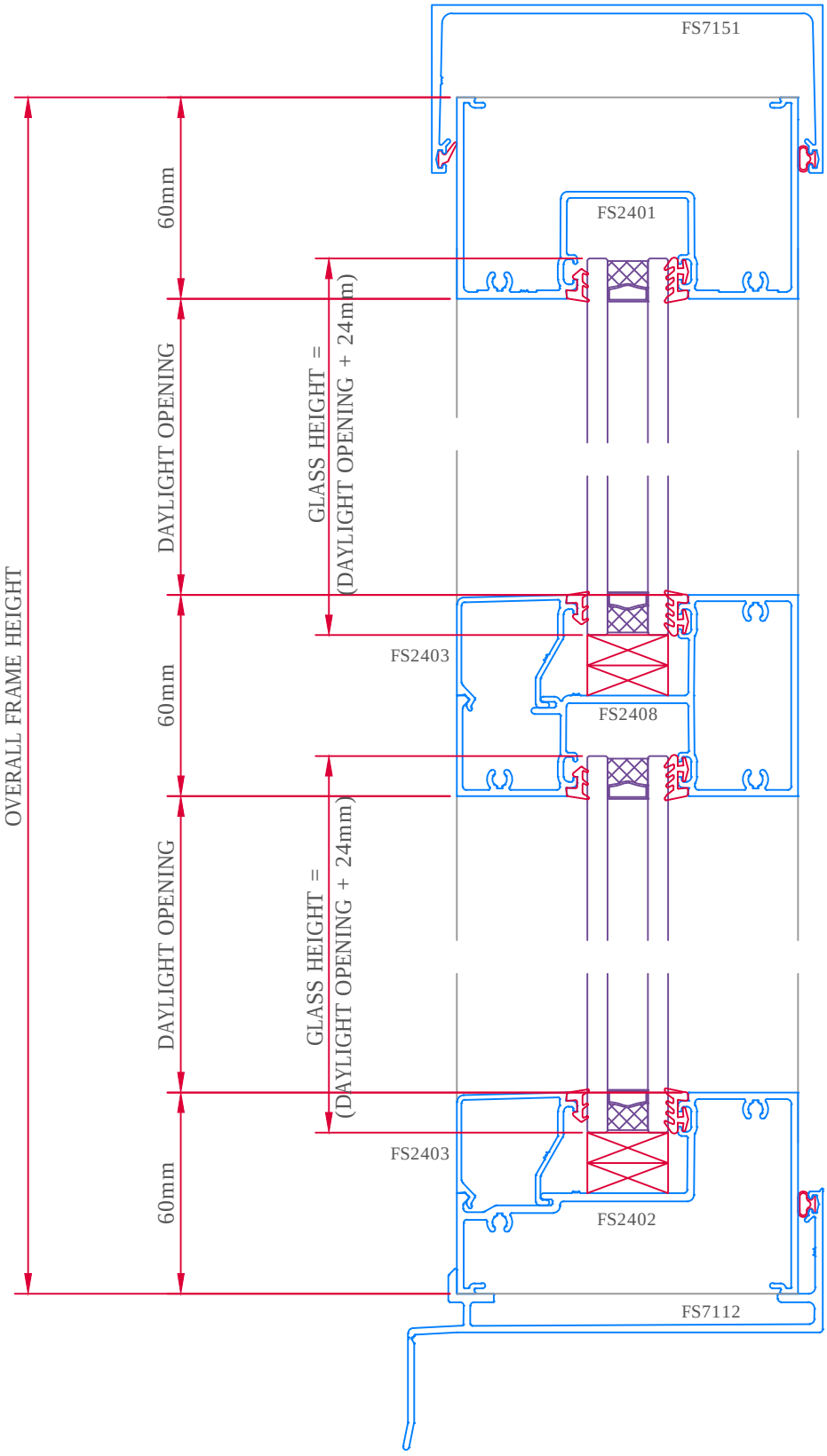

Copyright

© ENVIROTECH FACADE SOLUTIONS 2009 ABN 16 138 073 631 claims copyright ownership of all information, text and designs contained in this publication. No part of this publication may be reproduced in any material form without prior written permission of ENVIROTECH FACADE SOLUTIONS PTY LTD.
Apart from any use permitted under the copyright act 1968 all other rights are reserved.

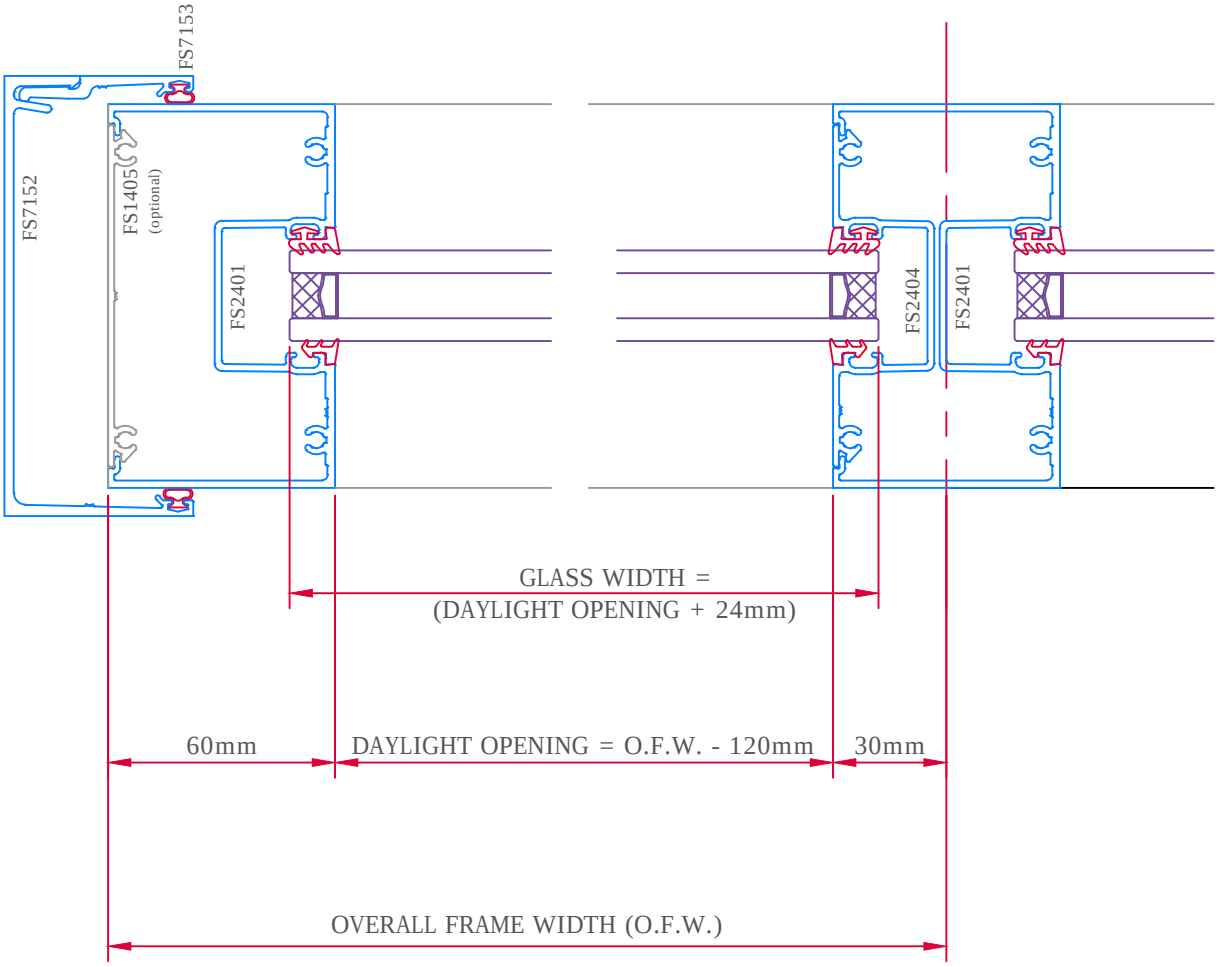

Copyright

© ENVIROTECH FACADE SOLUTIONS 2009 ABN 16 138 073 631 claims copyright ownership of all information, text and designs contained in this publication. No part of this publication may be reproduced in any material form without prior written permission of ENVIROTECH FACADE SOLUTIONS PTY LTD.
Apart from any use permitted under the copyright act 1968 all other rights are reserved.

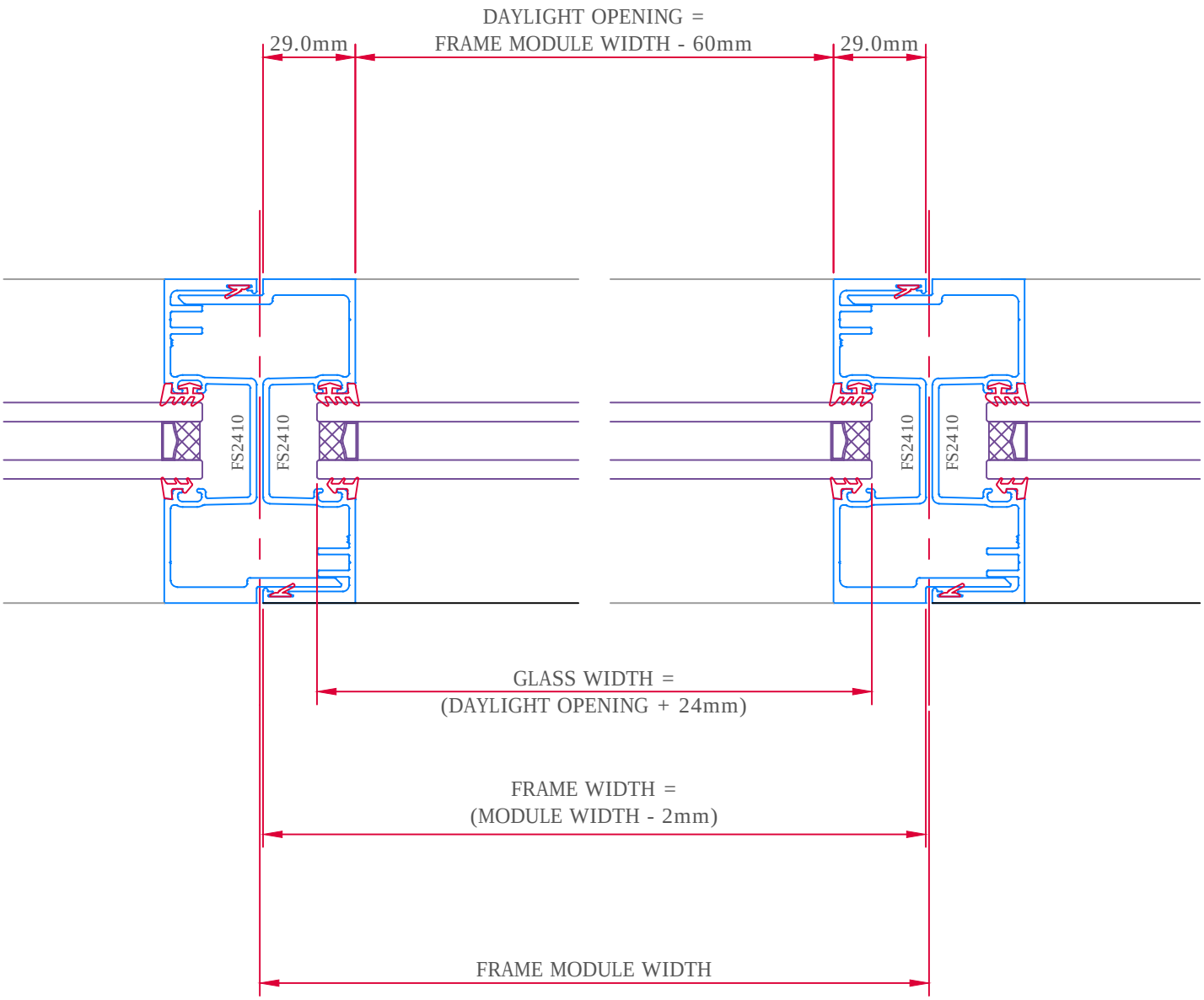

Copyright
© ENVIROTECH FACADE SOLUTIONS 2009 ABN 16 138 073 631 claims copyright ownership of all information, text and designs contained in this publication. No part of this publication may be reproduced in any material form without prior written permission of ENVIROTECH FACADE SOLUTIONS PTY LTD.
Apart from any use permitted under the copyright act 1968 all other rights are reserved.

ENVIROTECH
FACADE
SOLUTIONS

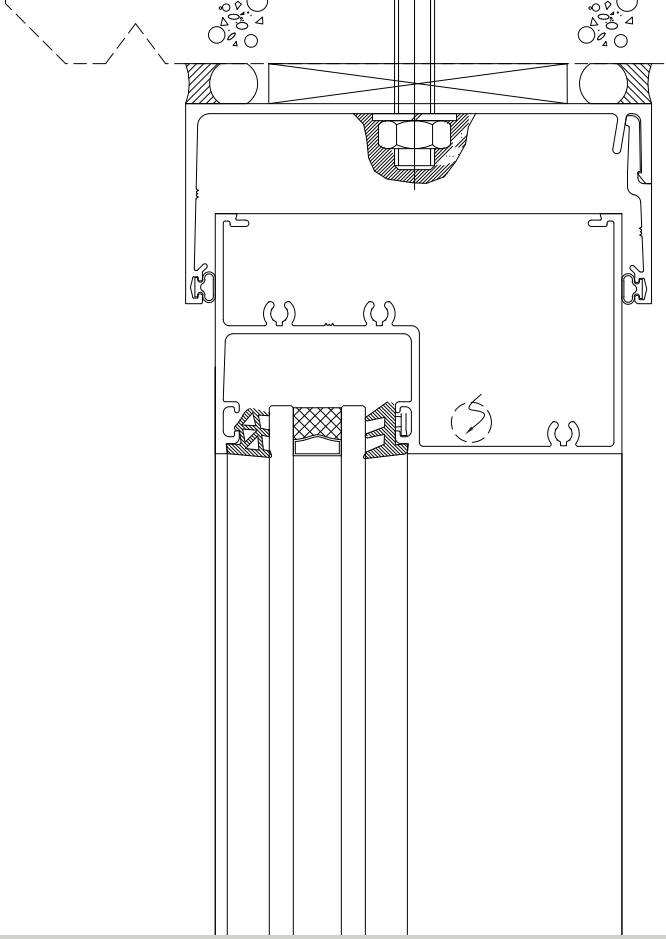



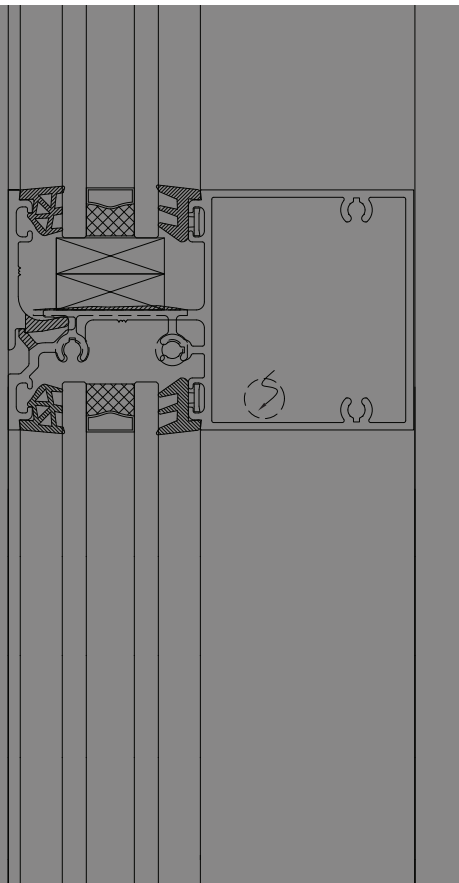

Envirotech Façade Solutions
108-112 Toongabbie Road
Girraween NSW 2145
p (02) 8677 4945 f (02) 8677 3200
www.envirotechfs.com.au